Affiliated to CBSE, New Delhi (Affiliation No. 1030642)

GNPS

GOMTI NANDAN PUBLIC SCHOOL

Gandhi Ward, Bina (M.P.) 470113. | 9165 609 333. | info@mygnps.com | www.mygnps.com

CLASS X · SCIENCE (086) · PHYSICS · CBSE BOARD EXAMINATION 2027

CHAPTER 11

# Electricity

Chapter Practice Booklet · Questions only · Answers in the separate Answer Booklet

12 note blocks + 5 diagrams | 73 practice questions | 3 case studies | Board question index

## INSIDE THIS BOOKLET


| | | |
|---|---|---|
| 1 | **Chapter Notes**<br>12 note blocks, 5 diagrams, quick reasons + exam snapshot | 2 |
| A | **NCERT Practice**<br>29 questions | 7 |
| B | **Exemplar Practice**<br>16 questions | 8 |
| C | **Board Pattern Practice**<br>28 questions, with frequency stars | 10 |
| D | **Case-Based Questions**<br>3 case studies | 12 |
| E | **Board PYQ Index**<br>Real 2023–2026 questions by type | 14 |
| F | **My Mistakes**<br>Your error log | 15 |


## STUDENT DETAILS

NAME _____

CLASS & SECTION _____

ROLL NO. _____

BOOKLET STARTED ON _____

CHAPTER TEST SCORE _____ / 20

1

READ THIS FIRST

# Chapter Notes

The whole chapter in short-note form: every definition, activity, diagram, formula and reason. Revise from here – you should not need the textbook again.

## 1 Electric charge and current

- **Electric current** is the rate of flow of charge through a cross-section of a conductor. In metals, the moving charges are **electrons**.

$$I = Q / t$$

- SI unit: **ampere (A)**. **1 A = 1 C / 1 s**: one coulomb of charge passes in one second. Small currents: 1 mA = $10^{-3}$ A, 1 μA = $10^{-6}$ A.
- Charge of an electron = **$1.6 \times 10^{-19}$ C**, so 1 C ≈ **$6.25 \times 10^{18}$ electrons**. Number of electrons n = Q / e.
- **Conventional current** flows from + to – (opposite to the flow of electrons).
- An **electric circuit** is a continuous, closed path for current. A **circuit diagram** shows it with these symbols:

| | |
|---|---|
| **Cell** long line = + | **Battery** two or more cells |
| **Key / switch** open (OFF) | **Key / switch** closed (ON) |
| **Wire joint** wires connected | **Wires crossing** not connected |
| **Electric bulb** | **Resistor** fixed resistance R |
| **Rheostat** variable resistance | **Ammeter** in series |
| **Voltmeter** in parallel | **Connecting wire** |

Symbols used in circuit diagrams

**Example:** 0.25 A flows for 4 minutes. Q = I t = 0.25 × 240 = **60 C**.

## 2 Potential difference

- Charge flows only when there is a **difference of electric pressure** (potential difference) between two points – like water flowing from a higher level. A **cell or battery** keeps this difference by chemical action.
- **Potential difference (V)** between two points = **work done** to move a **unit charge** from one point to the other.

$$V = W / Q$$

- SI unit: **volt (V)**. **1 V = 1 J / 1 C**: 1 joule of work moves 1 coulomb of charge between the two points.

**Example:** work to move 3 C across 9 V: W = VQ = 9 × 3 = **27 J**.

## 3 Measuring current and potential difference

- **Ammeter** (measures current): joined in **series**, so the whole current passes through it.
- **Voltmeter** (measures PD): joined in **parallel** across the two points; it has a high resistance and takes very little current.
- The **+ terminal** of each meter goes towards the + terminal of the cell (the longer line). A **plug key** completes or breaks the circuit.

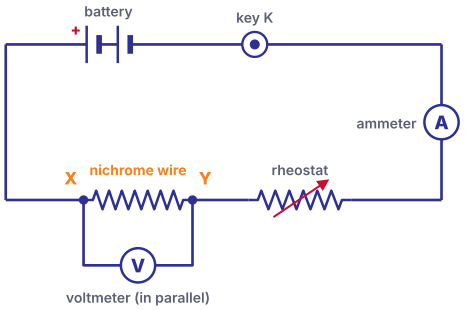


Circuit to study V and I for a nichrome wire XY

Changing the rheostat (or the number of cells) changes the current; V and I are noted each time.

## 4 Ohm's law

**Ohm's law:** the current through a metallic conductor is **directly proportional** to the potential difference across its ends, provided its **temperature remains the same**.

$$V \propto I \Rightarrow V = I\,R$$

- **R** is the **resistance**: the property of a conductor to oppose the flow of charge. Unit: **ohm (Ω)**; 1 Ω = 1 V / 1 A.
- For a given V, I = V/R: **doubling R halves the current**. A **rheostat** changes the resistance in a circuit.

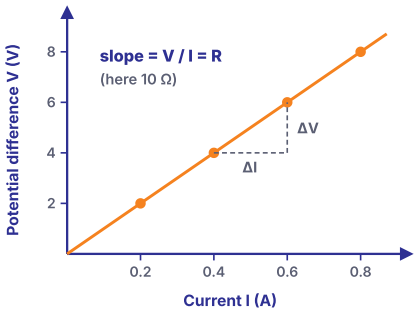


V–I graph: a straight line through the origin

- A wire with a **steeper** V–I line (V on the y-axis) has a **higher resistance**.

## 5 Resistance and resistivity

- Resistance depends on the **length** (R ∝ l), the **area of cross-section** (R ∝ 1/A), the **material** and its temperature.

$$R = \rho\, l / A$$

- **ρ (rho)** is the **resistivity**, unit **Ω m**. It depends on the **material** and temperature only, not on the length or thickness.
- Metals and alloys: ρ about $10^{-8}$ to $10^{-6}$ Ω m (good conductors). Insulators (glass, rubber, ebonite): ρ about $10^{12}$ to $10^{17}$ Ω m.
- **Silver and copper** have the lowest resistivity; copper and aluminium are used for wires and transmission lines. **Tungsten** is used for bulb filaments.
- An **alloy** has a higher resistivity than its metals and does not oxidise (burn) readily at high temperature, so **nichrome** is used in heating elements.
- A thicker wire has less resistance; stretching a wire to double its length halves its area, so R becomes **4 times**.

## 6 Resistors in series

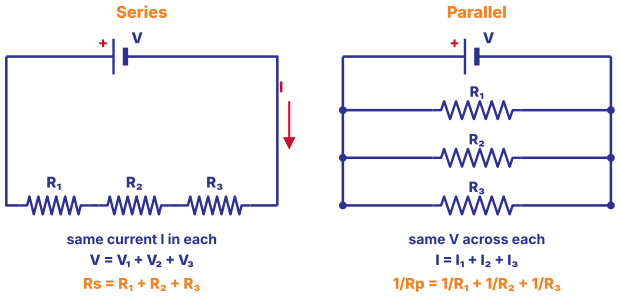


Resistors in series and in parallel

- **Series:** joined end to end – the **same current** flows through each. The total PD is the sum of the PDs across each resistor:

$$V = IR_1 + IR_2 + IR_3 = I\,R_s \Rightarrow R_s = R_1 + R_2 + R_3$$

- $R_s$ is **more than the largest** resistance. The PD divides in the **ratio of the resistances**.

## 7 Resistors in parallel

- **Parallel:** joined between the same two points – the **same PD** across each. The total current is the sum of the separate currents:

$$I = V/R_1 + V/R_2 + V/R_3 = V/R_p$$

$$1/R_p = 1/R_1 + 1/R_2 + 1/R_3$$

- $R_p$ is **less than the smallest** resistance. For two resistors $R_p = R_1R_2 / (R_1 + R_2)$; for n equal resistors $R_p = R / n$.
- The current divides in the **inverse ratio** of the resistances – the smaller resistor takes the larger current.

## 8 Series or parallel at home?

| Series | Parallel |
|---|---|
| If one device fails, the circuit breaks and **all stop**. | Each device works **independently**. |
| The same current flows through all, though devices need very different currents. | Each device takes the current it needs. |
| The supply voltage is **shared**; no device gets the full 220 V. | Every device gets the **full voltage**. |
| Total resistance is high, so current is small. | Total resistance is low; each device can have its own switch. |

So household appliances are always connected in **parallel**. Decorative bulb strings are often in series – one fused bulb puts all of them off.

## 9 Heating effect of current – Joule's law

- When current flows through a resistor, the source keeps doing work; this energy appears as **heat** in the resistor.
- Work done in moving charge Q through PD V in time t: W = VQ = V I t. Using V = IR:

$$H = V\,I\,t = I^2\,R\,t = V^2\,t\,/\,R$$

> **Joule's law of heating:** the heat produced in a resistor is proportional to (i) the **square of the current**, (ii) the **resistance** and (iii) the **time** for which the current flows.

- Doubling the current makes **four times** the heat. At the same current, doubling R doubles the heat; at the same voltage, doubling R halves it.
- The heating is unwanted in wires and motors (energy wasted) but useful in heaters.

## 10 Uses of the heating effect

- **Electric iron, toaster, oven, kettle, room heater**: heating elements of nichrome.
- **Bulb filament**: tungsten (melting point **3380 °C**) keeps glowing at a very high temperature without melting. The filament is thermally isolated and the bulb is filled with inactive **nitrogen and argon** to make the filament last longer. Most of the power still appears as heat; only a little as light.
- **Electric fuse**: a short wire of a metal or alloy with a **low melting point** (e.g. aluminium, copper, iron, lead), in a porcelain cartridge, joined in **series** with the device. If the current rises above the safe value, the wire heats up, **melts** and breaks the circuit.
- Fuses are rated 1 A, 2 A, 3 A, 5 A, 10 A and so on. A 1 kW iron on 220 V draws 1000 / 220 = 4.5 A, so a 5 A fuse suits it.

## 11 Electric power and energy

- **Electric power** is the rate at which electrical energy is used (or supplied).

$$P = V\,I = I^2\,R = V^2\,/\,R$$

- SI unit: **watt (W)**; 1 W = 1 V × 1 A. 1 kW = 1000 W.
- **Energy = power × time**. The **commercial unit** is the **kilowatt hour (kWh)**, called one **'unit'** on the electricity bill:

$$1\ \text{kWh} = 1000\ \text{W} \times 3600\ \text{s} = 3.6 \times 10^6\ \text{J}$$

- A rating such as **'60 W, 220 V'** means the device uses 60 W when run on 220 V. Its resistance $R = V^2/P = 220^2/60 \approx 807\ \Omega$.
- We pay for **energy** (kWh), not for power or current.

**Example:** a 2 kW heater runs 3 h a day for 30 days: 2 × 3 × 30 = **180 units**; at ₹7 per unit, ₹1260.

### 12 Solving electricity numericals

| | |
|---|---|
| **Charge, current** | $Q = I\,t$; $n = Q / e$ |
| **PD, work** | $V = W / Q$ |
| **Ohm's law** | $V = I\,R$ |
| **Resistivity** | $R = \rho\, l / A$; $A = \pi\, r^2$ |
| **Series / parallel** | $R_s = R_1 + R_2 \ldots$; $1/R_p = 1/R_1 + 1/R_2 \ldots$ |
| **Heat** | $H = I^2 R\,t = V\,I\,t = V^2\,t / R$ |
| **Power, energy** | $P = V\,I = I^2 R = V^2 / R$; $E = P\,t$ |

- **Method:** write the data in SI units (cm → m, $mm^2 \rightarrow 10^{-6}\ m^2$, minutes → s), write the formula, substitute **with units**, and box the answer with its unit.

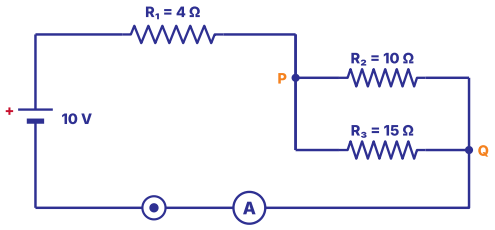


Worked example

- $R_2 \parallel R_3 = (10 \times 15)/(10 + 15) =$ **6 Ω**; total $R = 4 + 6 =$ **10 Ω**; $I = 10\ V / 10\ \Omega =$ **1 A**.
- PD across $R_1 = 1 \times 4 = 4$ V; across PQ $= 1 \times 6 = 6$ V. Current in $R_2 = 6/10 =$ **0.6 A**; in $R_3 = 6/15 =$ **0.4 A** (0.6 + 0.4 = 1 A ✓).

## Explain why – quick answers

Common 1- and 2-mark reasons

**An ammeter is joined in series** – the whole current must pass through it to be measured.

**A voltmeter is joined in parallel** – it measures the PD between two points and takes very little current.

**Heating elements use nichrome** – it has high resistivity and does not oxidise easily when red-hot.

**Copper is used for connecting wires** – its resistivity is very low, so little energy is lost as heat.

**The heater cord does not glow but the element does** – the cord has low resistance; the element has high resistance.

**A thick wire carries current more easily** – a larger area of cross-section means less resistance.

**Appliances at home are joined in parallel** – each gets the full voltage and can be switched on and off on its own.

**A fuse wire has a low melting point** – it must melt quickly when the current becomes too large.

**Bulbs are filled with nitrogen or argon** – these inactive gases make the filament last longer.

**Tungsten is used for filaments** – its very high melting point (3380 °C) lets it glow without melting.

**Doubling the current makes four times the heat** – heat is proportional to $I^2$.

**We pay for kWh, not watts** – the bill is for energy used = power × time.

## Exam snapshot

What the board asks, and how to prepare

### SYLLABUS 2026–27

- Electric current, potential difference and electric current; Ohm's law; resistance, resistivity and the factors on which the resistance of a conductor depends; series and parallel combination of resistors and their applications in daily life; heating effect of electric current and its applications in daily life; electric power; interrelation between P, V, I and R.

### BOARD WEIGHTAGE

**25** / 80

Physics = 25 marks (Section C), shared by Chapters 9–12. This chapter got 7 marks in the 2026 paper (a 2-mark numerical with an OR and the 5-mark long answer) and 6 in the 2026–27 sample paper (an MCQ on power, a 2-mark question on Joule's law OR resistivity and a 3-mark resistor network).

### MOST ASKED IN BOARD AND SAMPLE PAPERS, 2025–2027 (5 PAPERS CHECKED)

| How often | Question type | Marks | Papers |
|---|---|---|---|
| ★★☆ | Current, charge, potential difference; circuit symbols | 1–3 | 2 of 5 |
| ★★★ | Ohm's law, resistance, resistivity and its factors | 1–5 | 4 of 5 |
| ★★★ | Series and parallel combinations of resistors | 1–5 | 5 of 5 |
| ★★☆ | Heating effect of current; Joule's law; fuse, filament | 1–5 | 2 of 5 |
| ★★★ | Electric power and energy; kWh | 1–3 | 4 of 5 |

### MISTAKES THAT COST MARKS

- Not changing units: cm to m, $mm^2$ to $10^{-6}$ $m^2$, minutes to seconds, kW to W.
- Using the **diameter** instead of the **radius** in $A = \pi r^2$.
- Adding resistances in **parallel** directly – use $1/R_p = 1/R_1 + 1/R_2$, then **invert** the result.
- Joining the **voltmeter in series** or the ammeter in parallel.
- Writing that resistivity changes with length or area – it depends only on the **material** (and temperature).
- Forgetting the unit or writing kW h as kW/h. 1 kWh = $3.6 \times 10^6$ J.

### HOW TO USE THIS BOOKLET

1. **Day 1:** Read the notes and the key tables; then Part A (NCERT).
2. **Day 2:** Part B (Exemplar) and Part C (board pattern). Do every MUST DO question first.
3. **Day 3:** Part D (case studies) and the real board questions listed in Part E.
4. **Tue 12 Jan (zero period): Physics chapter test – 20 marks, 40 minutes.**
5. Check every answer in the **Answer Booklet**. Write each mistake on the My Mistakes page (Part F).

A

PART A · NCERT PRACTICE

# NCERT Practice

The ideas of every NCERT activity, in-text question and exercise, asked in new words with new numbers. Finish every question.

## Current and potential difference

**A1.** What is an electric circuit? What is meant by a current of 1 ampere? MUST DO [2]

**A2.** Calculate the number of electrons that make up a charge of one coulomb. (Charge on an electron = $1.6 \times 10^{-19}$ C) MUST DO [2]

**A3.** A current of 0.4 A flows through a bulb for 5 minutes. How much charge passes through it? [2]

**A4.** Name a device that maintains a potential difference across a conductor. What is meant by saying that the PD between two points is 1 volt? [2]

**A5.** How much energy is given to each coulomb of charge passing through a 9 V battery? [1]

**A6.** How are an ammeter and a voltmeter connected in a circuit? MUST DO [2]

## Ohm's law and resistance

**A7.** State Ohm's law. Draw the V–I graph for a conductor that obeys it. MUST DO [3]

**A8.** On what factors does the resistance of a conductor depend? MUST DO [2]

**A9.** Will current flow more easily through a thick wire or a thin wire of the same material and length, joined to the same source? Why? [2]

**A10.** The resistance of a component stays constant while the PD across it is halved. What happens to the current? [1]

**A11.** Why are the coils of electric toasters and irons made of an alloy rather than a pure metal? MUST DO [2]

**A12.** The resistivities of four materials, in Ω m, are: P – $1.6 \times 10^{-8}$, Q – $10 \times 10^{-8}$, R – $94 \times 10^{-8}$ and S – $10^{13}$. [2]

(i) Which is the best conductor?

(ii) Which is an insulator?

(iii) Which is a better conductor, Q or R?

**A13.** A wire 2 m long and 0.4 mm in diameter has a resistance of 16 Ω. Find the resistivity of its material. What will be the resistance of a wire of the same material and length but twice the diameter? ($\pi = 3.14$) MUST DO [3]

**A14.** A wire of resistance R is cut into four equal parts, which are then joined in parallel. If the resistance of the combination is R′, find R/R′. MUST DO [2]

## Combination of resistors

**A15.** Draw a circuit with a battery of four 1.5 V cells, resistors of 4 Ω, 6 Ω and 10 Ω and a plug key, all in series, with an ammeter in the circuit and a voltmeter across the 10 Ω resistor. What will the two meters read? MUST DO [3]

**A16.** Judge the equivalent resistance when these are joined in parallel: (a) 2 Ω and $10^5$ Ω (b) 2 Ω, $10^3$ Ω and $10^6$ Ω. [2]

**A17.** A lamp of 100 Ω, a toaster of 50 Ω and a water filter of 100 Ω are joined in parallel to a 220 V supply. What is the resistance of an iron that, on the same supply, takes as much current as all three together? What is this current? MUST DO [3]

**A18.** Give two advantages of joining electrical devices in parallel with the supply instead of in series. MUST DO [2]

**A19.** Three resistors of 4 Ω, 6 Ω and 12 Ω are available. How will you join them to get a total resistance of (a) 8 Ω (b) 2 Ω? MUST DO [2]

**A20.** What is (a) the highest and (b) the lowest total resistance that can be obtained from four coils of 3 Ω, 6 Ω, 9 Ω and 18 Ω? [2]

### Heating effect, power and energy

**A21.** Why does the cord of an electric heater not glow while its heating element does? MUST DO [2]

**A22.** Find the heat produced when 72 000 C of charge is moved in one hour through a potential difference of 25 V. [2]

**A23.** An electric iron of resistance 40 Ω draws a current of 5 A. Find the heat produced in 20 s. MUST DO [2]

**A24.** What determines the rate at which energy is delivered by a current? A water pump draws 4 A from a 220 V line. Find its power and the energy it uses in 3 hours. MUST DO [3]

**A25.** Which uses more energy: a 150 W TV set in 2 hours or a 1500 W heater in 10 minutes? [2]

**A26.** Two lamps, rated 100 W and 40 W at 220 V, are joined in parallel to a 220 V supply. Find the current drawn from the supply. [2]

**A27.** An electric heater of resistance 10 Ω draws 12 A from the mains. At what rate is heat produced? [1]

**A28.** Why is tungsten used for bulb filaments? Why are bulbs filled with nitrogen or argon? [2]

**A29.** What is an electric fuse? How is it connected, and why is its wire made of a material with a low melting point? MUST DO [2]

## B

PART B · EXEMPLAR PRACTICE

## Exemplar Practice

Exemplar-style questions, one step harder. Show the formula and units in every numerical.

### Multiple choice

1 mark each

**B1.** In a circuit, which instrument is joined in parallel with a resistor? [1]

(a) Ammeter (b) Voltmeter (c) Rheostat (d) Plug key

**B2.** The resistivity of a wire depends on its: [1]

(a) length (b) area of cross-section
(c) material (d) shape

**B3.** The SI unit of resistivity is: [1]

(a) Ω (b) Ω m (c) Ω / m (d) Ω m²

**B4.** In a series circuit, which quantity is the same for every resistor? [1]

(a) Current (b) Potential difference
(c) Power (d) Heat produced

**B5.** Wire P is twice as long as wire Q and has half its area of cross-section; both are of the same material. $R_P : R_Q$ is: [1]

(a) 1 : 4 (b) 1 : 1 (c) 2 : 1 (d) 4 : 1

**B6.** The current through a 60 W, 220 V bulb working normally is about: [1]

(a) 0.27 A (b) 3.7 A (c) 0.37 A (d) 2.7 A

**B7.** 1 kWh equals: [1]

(a) $3.6 \times 10^3$ J (b) $3.6 \times 10^5$ J (c) $3.6 \times 10^6$ J (d) 1000 J

**B8.** For a conductor obeying Ohm's law, the V–I graph is: [1]

(a) a curve (b) a straight line through the origin
(c) a line parallel to the I-axis (d) a line parallel to the V-axis

**B9.** The heating element of an electric iron is made of: [1]

(a) copper (b) tungsten (c) nichrome (d) silver

**B10.** Three resistors of 6 Ω each are joined in parallel. The equivalent resistance is: [1]

(a) 18 Ω (b) 2 Ω (c) 3 Ω (d) 0.5 Ω

## Short answer

2–3 marks

**B11.** Resistors of 4 Ω and 12 Ω are joined in parallel across a 6 V battery. Find the equivalent resistance, the total current and the current in each resistor. MUST DO [3]

**B12.** An electric bulb is rated 100 W, 220 V. Find its resistance and the current it draws. [2]

**B13.** Two identical resistors are joined first in series and then in parallel to the same supply. Find the ratio of the heat produced in the two cases in the same time. MUST DO [2]

**B14.** Why is a series arrangement not used in domestic circuits? [2]

**B15.** On a graph of V (y-axis) against I (x-axis), the line for resistor A is steeper than that for resistor B. Which has the higher resistance? Where would the line for A and B joined in series lie? [2]

**B16.** A house uses a 1.5 kW geyser for 2 h a day and four 20 W LED bulbs for 5 h a day. Find the units used in 30 days and the cost at ₹6 per unit. MUST DO [3]

C

PART C · BOARD PATTERN

# Board Pattern Practice

Question types from the 2025 and 2026 board papers and the CBSE sample papers. ★★★ = asked in 3 or more of the 5 papers checked · ★★ = 2 papers · ★ = 1 paper.

### ASSERTION–REASON: HOW TO ANSWER

**(a)** Both A and R are true, and R is the correct explanation of A.
**(b)** Both A and R are true, but R is not the correct explanation of A.
**(c)** A is true, but R is false.
**(d)** A is false, but R is true.

## Current, potential difference, symbols

★★☆ 2 of 5 papers · 1–3 marks

**C1.** 1 volt is the same as: [1]

**(a)** 1 J / C **(b)** 1 C / J **(c)** 1 J × C **(d)** 1 C / s

**C2.** A charge of 180 C passes through a wire in 1.5 minutes. The current is: [1]

**(a)** 2 A **(b)** 120 A **(c)** 0.5 A **(d)** 270 A

**C3.** ASSERTION–REASON [1]

**Assertion (A):** An ammeter is always joined in series in a circuit.
**Reason (R):** The whole current to be measured must pass through the ammeter.

**C4.** (a) Define 1 volt. (b) Draw the symbols for a battery, a closed plug key, a rheostat and a voltmeter. MUST DO [3]

## Ohm's law, resistance and resistivity

★★★ 4 of 5 papers · 1–5 marks

**C5.** A wire of resistance 20 Ω is cut into two equal halves, which are joined in parallel. The resistance of the combination is: [1]

**(a)** 5 Ω **(b)** 10 Ω **(c)** 20 Ω **(d)** 40 Ω

**C6.** If both the length and the radius of a wire are doubled, its resistance becomes: [1]

**(a)** half **(b)** double **(c)** the same **(d)** four times

**C7.** ASSERTION–REASON [1]

**Assertion (A):** Nichrome is used for the heating elements of electric irons.
**Reason (R):** Nichrome has a high resistivity and does not oxidise easily at high temperature.

**C8.** A wire 50 cm long with a radius of 0.2 mm has a resistance of 4 Ω. Find the resistivity of its material. ($\pi = 3.14$) MUST DO [2]

**C9.** (a) How is resistivity different from resistance? (b) How does the resistance of a wire change if (i) its length is tripled (ii) its area of cross-section is doubled? (c) Why is copper used for house wiring? [3]

**C10.** In an experiment, a student got these readings for a wire: V = 1, 2, 3, 4 V and I = 0.25, 0.50, 0.75, 1.00 A. (a) What will the V–I graph look like? (b) Find the resistance. (c) Under what condition does this relation hold? [3]

## Series and parallel combinations

★★★ 5 of 5 papers · 1–5 marks

**C11.** Resistors of 3 Ω and 6 Ω are joined in parallel. The equivalent resistance is: [1]

(a) 2 Ω (b) 9 Ω (c) 4.5 Ω (d) 18 Ω

**C12.** How many bulbs rated 12 V, 6 W must be joined in series across a 240 V supply for each to glow normally? [1]

(a) 10 (b) 20 (c) 40 (d) 60

**C13.** ASSERTION–REASON [1]

**Assertion (A):** The equivalent resistance of resistors in parallel is less than the smallest of them.

**Reason (R):** In parallel, the current gets more paths to flow.

**C14.** Resistors of 6 Ω and 3 Ω are joined in series to a 9 V battery. Find (a) the total resistance (b) the current (c) the PD across each resistor. MUST DO [3]

**C15.** Two bulbs X and Y are joined in parallel to a 6 V battery. X draws 1 A and Y draws 0.5 A. Find (a) the current from the battery (b) the resistance of each bulb (c) the equivalent resistance. MUST DO [3]

**C16.** Resistors of 10 Ω and 15 Ω are joined to a 12 V supply (a) in series (b) in parallel. Find the current drawn in each case. [2]

## Heating effect of current

★★☆ 2 of 5 papers · 1–5 marks

**C17.** If the current through a resistor is doubled, the heat produced in the same time becomes: [1]

(a) double (b) four times (c) half (d) the same

**C18.** Which of these does NOT work on the heating effect of current? [1]

(a) Electric iron (b) Fuse

(c) Filament bulb (d) Electric fan

**C19.** State Joule's law of heating and write its formula. How does the heat change if the resistance is doubled, the current staying the same? MUST DO [2]

**C20.** A 2 kW oven is used on a 220 V line protected by a 5 A fuse. What will happen, and why? Suggest a suitable fuse. [3]

## Electric power and energy

★★★ 4 of 5 papers · 1–3 marks

**C21.** The resistance of a 55 W, 220 V LED lamp is: [1]

(a) 880 Ω (b) 4 Ω (c) 0.25 Ω (d) 12 100 Ω

**C22.** A 1100 W iron runs on a 220 V supply. The current it draws is: [1]

(a) 0.2 A (b) 4 A (c) 5 A (d) 2.4 A

**C23.** A heater rated 220 V, 5 A is used on a 110 V supply. Find its power now, taking its resistance to be constant. MUST DO [2]

**C24.** Two identical bulbs, each rated 60 W, 220 V, are joined to a 220 V supply (a) in parallel (b) in series. Find the total power in each case. [3]

**C25.** In a house a 1 kW microwave oven runs 30 minutes a day and five 15 W LED bulbs run 6 hours a day. Find the units used in 30 days and the cost at ₹8 per unit. [3]

## Long answer

5 marks

**C26.** In the circuit shown, find (a) the equivalent resistance (b) the current from the battery (c) the PD across $R_1$ and across PQ (d) the current in $R_2$ and in $R_3$ (e) the power used in $R_1$. [5]

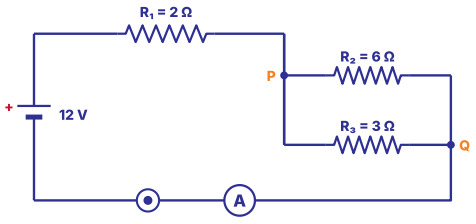


MUST DO

**C27.** (a) Define resistivity and give its SI unit. (b) Why are alloys used in heating devices? (c) Define 1 ampere. (d) A wire 1.5 m long with an area of cross-section of 0.5 mm² has a resistance of 3 Ω. Find its resistivity. MUST DO [5]

**C28.** (a) Derive $H = I^2Rt$ for the heat produced in a resistor. (b) Find the heat produced in a 4 Ω resistor carrying 2 A for 5 minutes. (c) Why is a fuse joined in series? (d) Express 1 kWh in joules. [5]

# D

PART D · SECTION C CASE STYLE

## Case-Based Questions

Each case carries 4 marks (1 + 1 + 2), as in the case-based questions of the board paper.

### D1. Case Study · Testing Two Wires [4]

In the physics lab, Aman joined two wires X and Y one at a time in a circuit with a battery, an ammeter and a voltmeter, keeping the wires at room temperature. His readings were:

| PD (V) | 1.0 | 2.0 | 3.0 |
|---|---|---|---|
| Current in X (A) | 0.50 | 1.00 | 1.50 |
| Current in Y (A) | 0.25 | 0.50 | 0.75 |

(i) Which law do these readings follow? [1]

(ii) Find the resistance of wire X. [1]

(iii) Find the equivalent resistance when X and Y are joined (a) in series (b) in parallel. [2]

OR

(iii) X and Y are joined in parallel across a 4 V battery. Find the current through each wire and from the battery. [2]

## D2. Case Study · The Kitchen Circuit [4]

A kitchen circuit runs on 220 V and is protected by a 10 A fuse. Neha's family uses an electric kettle rated 2 kW and a toaster rated 800 W. One morning both were switched on together and the fuse wire melted. The kettle is used for about 15 minutes every day.

(i) Find the current drawn by the kettle alone. [1]

(ii) Why did the fuse melt when both were switched on? [1]

(iii) Find the energy used by the kettle in 30 days and the cost at ₹7 per unit. [2]

OR

(iii) Find the resistance of the kettle's heating element. Why is it made of nichrome? [2]

## D3. Case Study · Festival Lights [4]

For Diwali, Kabir bought a string of 20 identical small bulbs joined in series, to be plugged into a 220 V socket. Each bulb has a resistance of 22 Ω. When one bulb fused, the whole string went dark. His father said that the lights and fans of the house are joined differently.

(i) Why did the whole string go dark when one bulb fused? [1]

(ii) What is the PD across each bulb? [1]

(iii) Find the current in the string and the power of each bulb. [2]

OR

(iii) Give two reasons why the lights and fans of a house are joined in parallel. [2]

E

PART E · REAL BOARD QUESTIONS

# Board PYQ Index

Real questions from recent Science board papers and CBSE sample papers, by type. Open the official paper and solve the listed questions.

| Frequency | Question type | Marks | Where asked (year: paper code, question number) | Practise here |
|---|---|---|---|---|
| ★★☆ | **Current, charge, potential difference; circuit symbols** | 1–3 | **2026:** 31/1/1 Q39 (unit of current) · **2025:** OD Set 1 Q33 (1 volt; circuit symbols) | A1–A6, B1, C1–C4 |
| ★★★ | **Ohm's law, resistance, resistivity and its factors** | 1–5 | **2026:** 31/1/1 Q34 (resistivity from R, radius and length), Q39 (resistance vs resistivity; alloys in heaters) · **2025:** Delhi Set 1 Q12 (wire cut and joined in parallel), Q32 (classify materials by resistivity) · **SQP 2024–25:** Q32 (resistance, length, area and resistivity) · **SQP 2026–27:** Q34 OR (resistivity) | A7–A14, B2–B3, B5, B8, B15, C5–C10, C27 |
| ★★★ | **Series and parallel combinations of resistors** | 1–5 | **2026:** 31/1/1 Q39 OR (bulbs in parallel, ammeter) · **2025:** OD Set 1 Q39 (case: X and Y in parallel; series current; equivalent R) · **2025:** Delhi Set 1 Q14 (bulbs in series on 240 V) · **SQP 2024–25:** Q36 (circuit with $R_1$, $R_2$ and PD OR lamps A and B) · **SQP 2026–27:** Q37 (resistor network: current and PD) | A15–A20, B4, B10–B11, B14, C11–C16, C26, D1, D3 |
| ★★☆ | **Heating effect of current; Joule's law; fuse, filament** | 1–5 | **2026:** 31/1/1 Q39 OR (Joule's law) · **SQP 2026–27:** Q34 (Joule's law: heat when R is doubled) | A21–A23, A28–A29, B9, B13, C17–C20, C28 |
| ★★★ | **Electric power and energy; kWh** | 1–3 | **2026:** 31/1/1 Q34 OR (heater power on a lower voltage) · **2025:** Delhi Set 1 Q13 (resistance of a 220 V, 11 W lamp) · **SQP 2024–25:** Q25 (heater power OR series vs parallel power) · **SQP 2026–27:** Q31 (current at 1000 W, 250 V) | A24–A27, B6–B7, B12, B16, C21–C25, D2 |

## PAPERS CHECKED (5)

- 2026 board paper 31/1/1 (Set 1) – first paper with separate Biology, Chemistry and Physics sections
- 2025 board paper, Outside Delhi Set 1
- 2025 board paper, Delhi Set 1
- CBSE Sample Question Paper 2024–25
- CBSE Sample Question Paper 2026–27 (the pattern for your exam)

★★★ = asked in 3 or more of the 5 papers checked · ★★ = 2 papers · ★ = 1 paper. Codes: OD = Outside Delhi. Each paper was read question by question; questions from the 2026–27 Sample Paper after Q20 were checked from a summary of the paper. Download the official papers from cbse.gov.in → Previous Year Question Papers and cbseacademic.nic.in → Sample Question Papers, and solve the exact questions listed.

F

PART F · YOUR RECORD

# My Mistakes

Write down each mistake from this chapter, including the chapter test.

Every wrong answer is a free lesson. Write it here, find the rule you missed, and redo the question after three days. Bring this page to class before the chapter test.

| Date | Part & Q No. | What went wrong | Correct rule or method | Redone ✓ |
|---|---|---|---|---|
| | | | | |
| | | | | |
| | | | | |
| | | | | |
| | | | | |
| | | | | |
| | | | | |
| | | | | |
| | | | | |
| | | | | |
| | | | | |